□58mm□□□□□□□□□□□ POS□□

□M/N□ POS-Q1/Q2)

□□□

□□11/12□□□□□

2G/3G/4G□□□□□

Q1□4G□□□MTK6737□1.25GHZ□□□□

Q2□3G□□□MTK6580□1.3GHZ□□□□

Q1 2G□□16G□□□

Q2 2G□□16G□□□

□□□□58mm□□□□□□□□□

□□5□□□□□□□□

□□□□□□□□

CCD □□□□□□□□

NFC□□□□□□□□□

□□12V DC□□□□□

5000mAh□□□□□□

□□□

□□□□	□□11/12

□□□□□	□□MTK6737,1.25GHZ (Q1,4G) / □□ MTK6580,1.3GHZ‖(Q2,3G)
□□	2GB
□□	16GB
□□	5.5" □□□□□□□□□□ 1280 x 720
□□	□□□□□□□
□□	5,000,000 □□
□□□	1D CCD □□□□□□□
□□□□	13.56MHZ 14443A NFC□□□□
□□	GSM900/1800 WCDMA2100 TD-SCDMA:B34 B39/ FDD-LTE:B1 B3 / TDD-LTE:B38 B39 B40 B41
□□	□□4.0
□□□□	□□□□ 802.11 b.g.n
□□□	1W□□□
□□□	□□□□□
□□	□□□□□□□
□□/□□	□□□□□USB□SIM□□
□□	7.4V / 5000mAh
□□□	58mm □□□□□□□□□□□□□ 90mm/s□ □□□□□ 50 □□
□□	□□□□ 42mm
□□□□□	□□□100-240V/1.5A 50/60Hz □□□12V 1A
□□	209.2 □□□□□x 87.4 □□□□□x 51.7 □□□□□

SMART Handheld POS Terminal

MULTI-PLATFORM AUTOMATIC PRINTING
easy to deal with a variety of working environment

Multiple versions Connection options

Support full Net-com, Bluetooth, WIFI multiple versions of connection, Excellent experience

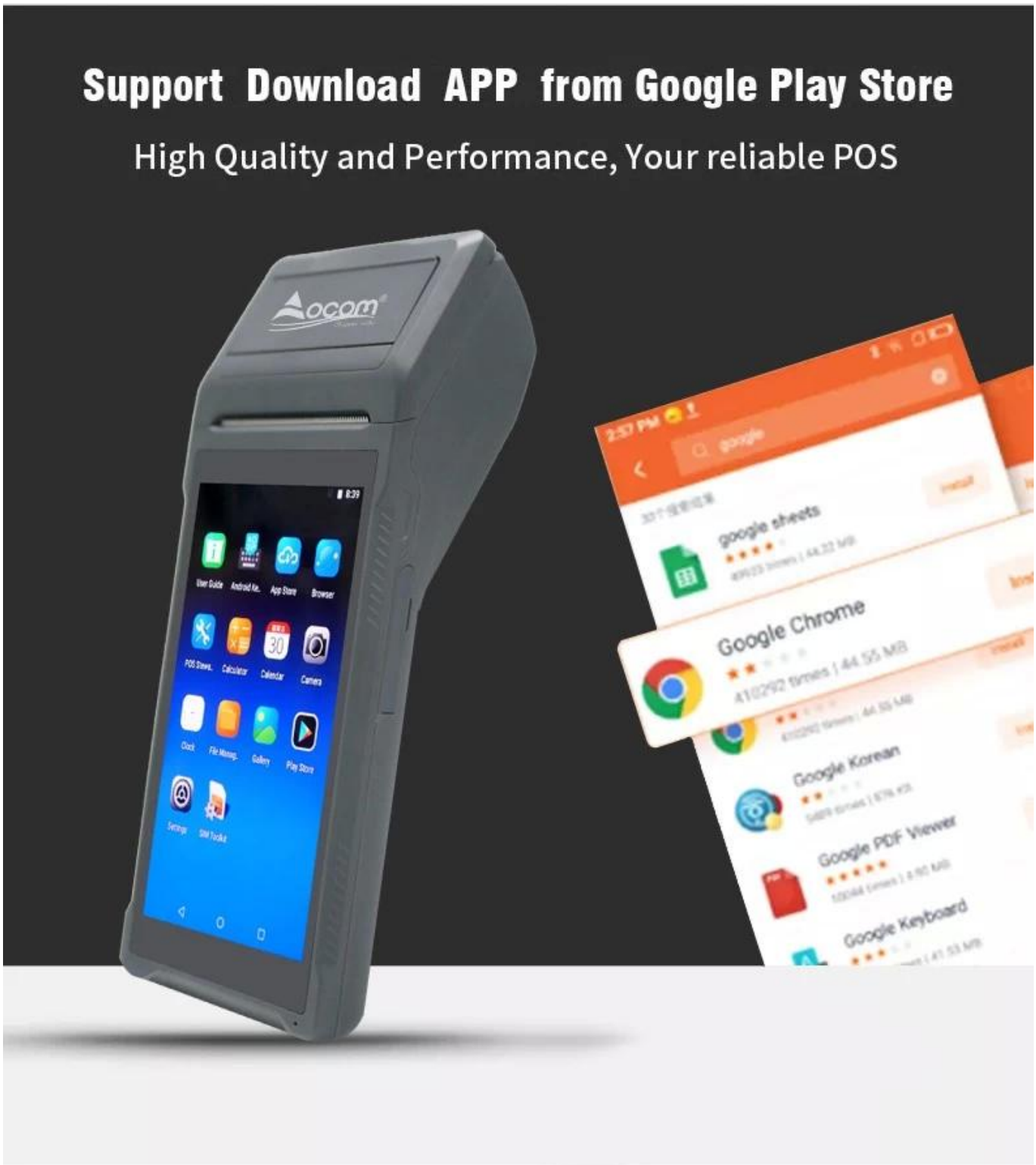
Support Download APP from Google Play Store
High Quality and Performance, Your reliable POS
Aocom
google sheets
Google Chrome
Google Korean
Google PDF Viewer
Google Keyboard

Large paper bin Print more durable

Can accommodate 42mm diameter thermal paper to avoid frequent paper changes and improve printing efficiency.

58mm
Maximum paper width

42mm
Maximum paper diameter

SMART PRINTING

5.5-inch HD IPS Screen

1280*720 resolution, stable every pixel, allowing users to see more clearly

5 Million Rear HD Camera

HD camera quickly identify barcodes QR codes
record important information
CCD Barcode scanner for optional

Scan code

Photo

Video

Structure specification

SMART PRINTING

Simple construction Easy operation

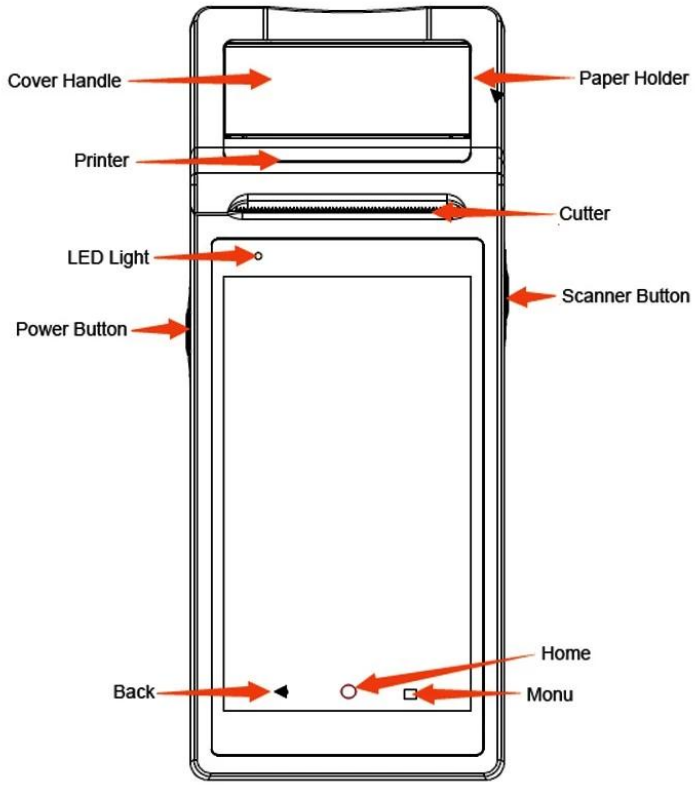

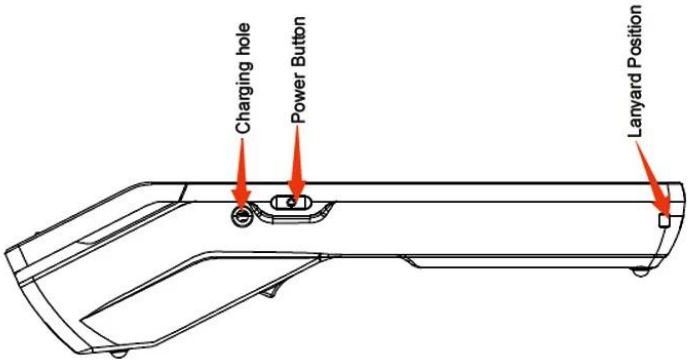

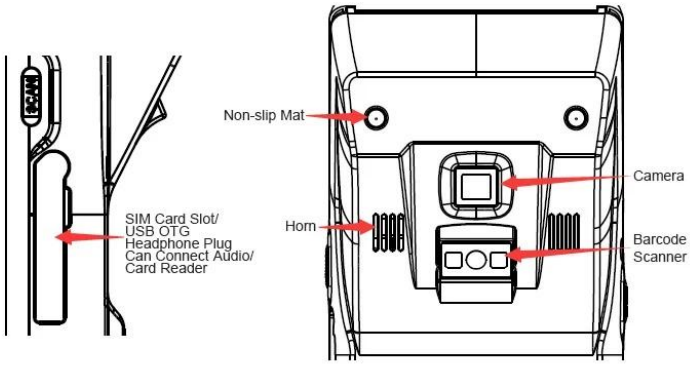

Dimensions

SMART PRINTING

209.2*87.4*51.7mm

Manual measurement has slight errors and does not affect the use.

Packaging accessories

SMART PRINTING

Beautiful packaging, original accessories

01 Packing box 02 Machine 03 User Manual

04 Charger

Application

Bar

Restaurant

Coffee Store

Mile Tea Store

Bakery

Convenience Store

Library

Supermarket

□□□□□

POS-Q1/Q2 SDK