2D Engine Product Spec Sheet (3100)

Spec Chart

Physical Characteristics

Dimensions:	Engine: 31.7mm L x 12.2mm H x 12mm D Decode board: 38mm L x 19mm W x7.5mm D
Weight (w/o cable):	10g
Power:	5 VDC ± 10% @ 260 mA

Performance Characteristics

Light Source:	Aimer: 617 nm LED Illumination: 625 nm LEDs
Field of View:	39° (H) x 25° (V)
Roll:	0 - 360°
Pitch:	± 65° or greater
Yaw:	± 60° or greater
Print Contrast:	25% minimum reflective difference

Symbology Decode Capability

1D:	UPC/EAN, UPC/EAN with supplementals, ISSN, BooklandEAN, UCC Coupon Extended Code, Code128, GS1-128, ISBT 128, Code 39 Full, ASCII,Code93,Code11, Matrix 2 of 5, Code 32, Interleaved 2 of 5, Code 39, Trioptic Code 39,Discrete 2of 5, Codabar, MSI, Chinese 2 of 5, GS1 DataBar, ISBT Concat Korean 3 of 5, Variants
2D:	PDF417,MicroPDF417,ompositeCodes,TLC-39,Data Matrix, Maxicode, QR Code, MicroQR, Aztec
Motion Tolerances:	Up to 25 in. / 63.5 cm per second
Interfaces Supported:	USB: HID Keyboard (default mode), COM Port Emulation RS232: Standard
Minimum Resolution:	-SR: Code 39 4.8mil, UPC 60% 5 mil, PDF417 5 mil,Datamatrix 7.5 mil -HD: Code 39 3 mil, UPC 60% 5 mil, PDF417 4 mil,Datamatrix 4.8 mil

Power Supplies:	Power supplies are available for applications that do not supply power over the host cable.

REGULATORY

Electrical Safety:	UL60950-1 2nd ed, CSA C22.2 No. 60950-1 2nd ed, EN60950-1/IEC60950-1 2nd ed.
LED Safety:	IEC/EN60825-1:2001, IEC/EN62471:2006
EMI/RFI:	FCC Part 15 Class B, ICES-003 Class B, EN55022 Class B, EN55024
Environmental:	Compliant with RoHS directive 2002/95/EEC

WARRANTY

Subject to the terms of OCOM 's hardware warranty statement, the 3100 is warranted against defects in workmanship and materials for a period of 1 years from the date of shipment. For the complete OCOM hardware product. warranty statement, go to: http://www.ocominc.com

User Environment

Operating Temp:	0° C to 55° C
Storage Temp:	-40° C to 60° C
Humidity:	5% to 95%, non-condensing
Drop Spec:	Withstands multiple 6 ft. drops to concrete
Ambient Light:	Immune to normal indoor lighting up to 1600 Lux.
Immunity:	Immune to sunlight up to 86,000 Lux.

Accessories

Interface board and cable

DECODE RANGES
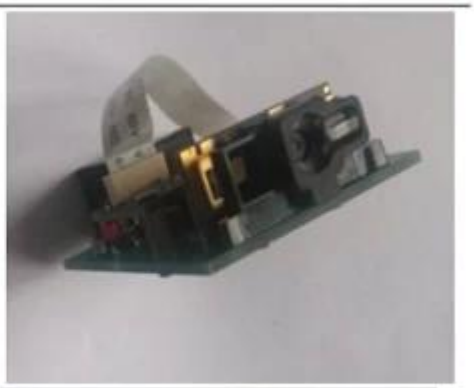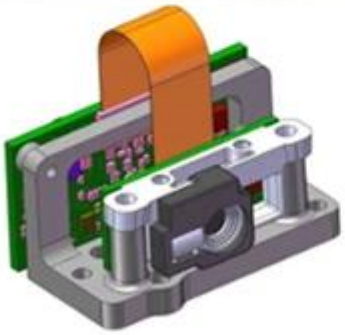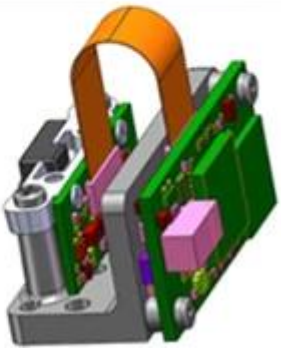
Typical Performance*		Typical Working Ranges			
		HD Focus Range		SR Focus Range	
Bar Code Type	**Symbol Density**	**Near**	**Far**	**Near**	**Far**
Code 39	5.0 mil	0mm	90mm	60mm	130mm
100% UPCA	13.0 mil	5mm	180mm	30mm	300mm
Code 39	20.0 mil	5mm	250mm	35mm	350mm
PDF 417	6.8 mil	0mm	85mm	40mm	150mm
Data Matrix	10.0 mil	0mm	70mm	50mm	130mm
QR Code	20.0 mil	0mm	180mm	25mm	250mm
Resolution 1D Code 39		3 mil (0.076mm)		5 mil (0.127mm)	
Resolution 2D Data Matrix		5 mil (0.127mm)		6.7 mil (0.170mm)	
*Performance may be impacted by bar code quality and environmental conditions.