Product Description

Problems faced bytraditional portable label printers:

·Develop APP is difficult, need to find the programmer to buy expensive softwar.
·Label paper need to be customized according to the actual application, do not have the flexibility to use.
·There is no interval sensor, the print content will be across the board.
·It is expensive and does not support cross-platform use.

Our printer:

·Mini size suitable for portable application;
·Provide Android App more suitable forend users;
·Compatible with bartender software;
·Support label interval sensor;
·Can change the printer name, password, baud rate online;
·40mm diameter paperwarehouse;
·Loading paper width can be adjusted;
·One printercan connected with up to 8 smart devices
(7 Android, one Apple device) visa blue tooth(optional);
·18650 Battery easy to replace;
·90mm/secprint speed;
·TSPL commandcompatible;

Specification:

Print method	Thermal line printing
Print commands	TSPL command
Effective print width	Max=48mm
Print speed	Up to 90mm/sec
Resolution	8 dots/mm(203dpi)
Paper dimensions	58.0±0.1mm x diameter 40.0mm
Paper thickness	0.06 to 0.12mm
Character set	Alphanumeric/ Chinese
Interface	USB,and Bluetooth
Flash	256KB
Power Adapter	9V DC/2A
Battery Power	2 pieces 3.7V 1300mAh18650 Battery series connected to7.4V
Other features	Paper detection, manual shut down
Working conditions	Temperature:-10~50 degC, Humidity:10%□90%
Storage conditions	Temperature:-20~70 degC, Humidity:5%□95%
Device name	Can be customized, letter and digital for option, at max 30 ASCII characters.

Password	Enter default pairing code “1234”, it can be customized or change by customer itself. At max 6 digitals.

Picture Show

OCOM®
At your side
OCPP-M11
Thanks for using OCOM printer
ISO FC CE RoHS

ocom®
At your side
OCPP-M11
POWER
ISO
FC
CE
RoHS

ocom®
At your side
OCPP-M11
ocom®
At your side
POWER
ISO
FC
CE
RoHS

ocom®
At your side
OCPP-M11
ISO
FC
CE
RoHS

Ocom®
At your side

OCPP-M11

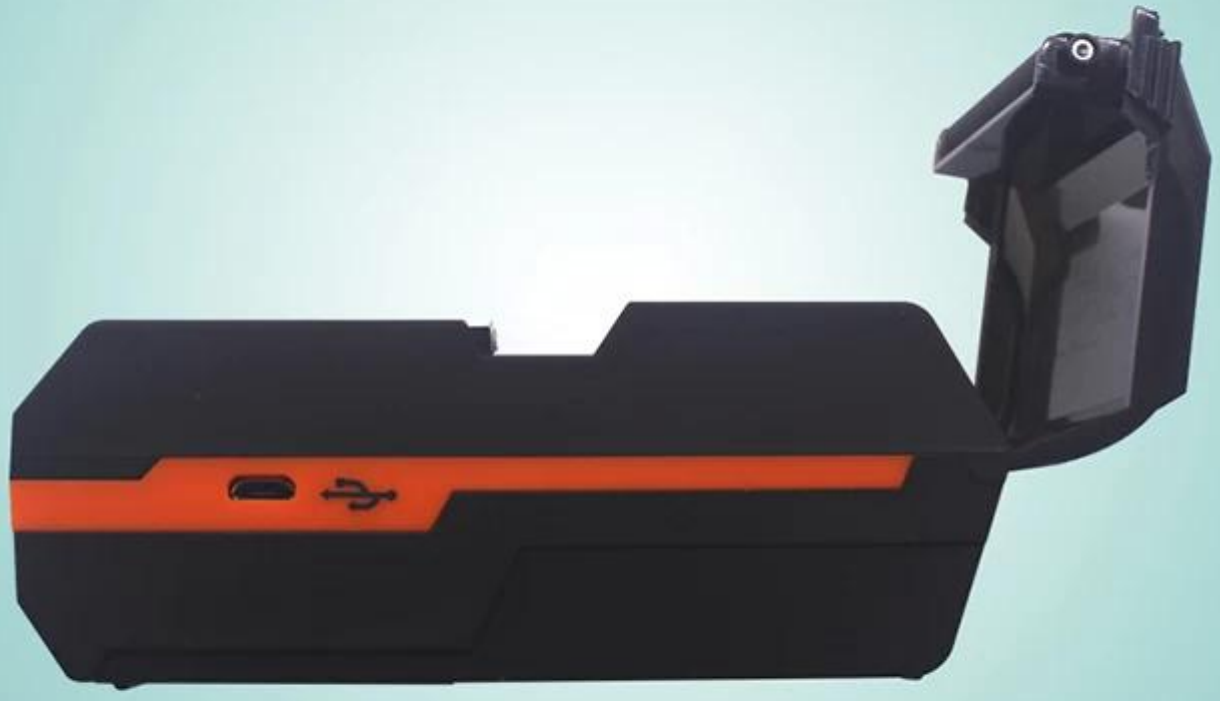

ISO FC CE RoHS

ocom®

At your side

OCPP-M11

ISO FC CE RoHS

ocom®
At your side
OCPP-M11
POWER
ISO
FC
CE
RoHS

ocom®
At your side
OCPP-M11
POWER
ISO
FC
CE
RoHS

ocom®
At your side
OCPP-M11
POWER
ocom®
At your side
ISO
FC
CE
RoHS

ocom®
At your side
OCPP-M11
POWER
ISO
FC
CE
RoHS

ocom®
At your side
OCPP-M11
ocom
Model: OCPP-M11
output: 9V~1A
20180300002
ISO
RoHS

ocom®
At your side
OCPP-M11
+ YN18650 3.7V 1200MAH 171103 -
ISO
FC
CE
RoHS

ocom®

At your side

OCPP-M11

ISO FC CE RoHS

OCOM®
At your side
OCPP-M11
Thanks for using OCOM printer
Thanks for using OCOM printer
Thanks for using OCOM printer
ISO FC CE RoHS

ocom®
At your side
OCPP-M11
ISO
FC
CE
RoHS

ocom®
At your side
OCPP-M11
ISO
FC
CE
RoHS

ocom®
At your side
OCPP-M11
Thanks for using OCOM printer
20180300001
POWER

Product Details

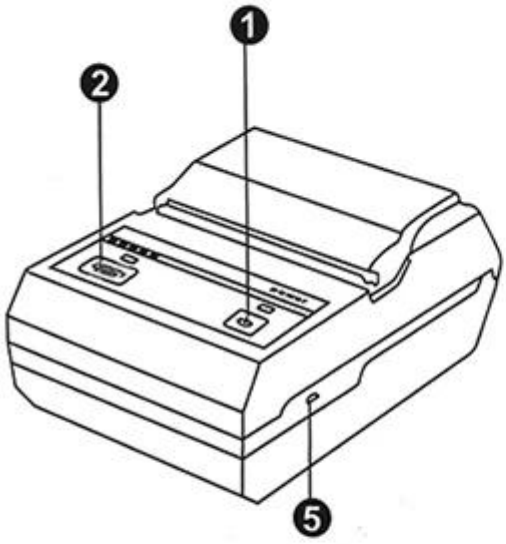

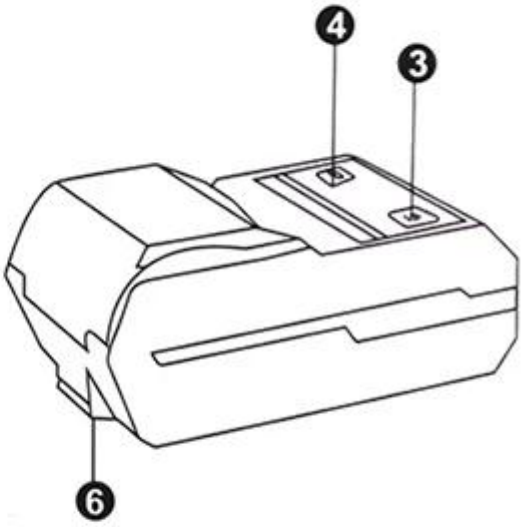

Button

1.Power Key
2.Feeding Key

LED

3.Power Light
4.Alarm Light

Port

5.Mini USB Port
6.Hook

Other

Instructions

Step one
Open the cover according arrow direction

Step two
Load roll paper according arrow direction

Step three
Close the cover

Application scenario

Logistics

Warehouse management

Supermarket

Clothing label

Jewelry label

Restaurant

Company

Certificates

Payment

PayPal
Maestro
postepay
carte bleue
CartaSi
SOLO
VISA
ESCROW

Contact us

Richard Hu

OCOM Technologies Limited

Add: 4/F, Block10, Zhongxing Industrial Park, Chuangye Road, Nanshan District, Shenzhen 518054, China
Tel: 0086.755.8605.3207 ext 808
Fax: 0086.755.8605.3207 ext 868
Web: www.ocominc.com, www.possolution.com.cn
E-mail: richard@ocominc.com, richard@ocomtech.com.cn
Skype: ocominc2000; MSN: ocomtech@hotmail.com
Ali TM: szocominc; QQ: 2485890637
Mobile/Wechat/Whatsapp: 0086. 133 5293 2860

Reliable One-Stop Supplier for POS and Auto-ID Related Products

FAQ

1. MOQ policy
No MOQ limitation for the standard products, but the unit price is different, bigger quantity better price.

For customized production, you can discuss the MOQ with our sales representative directly.

2. Sample Availability & Policy
After customers confirmed the specification, we are very glad to provide samples for testing and qualification.

All samples should be paid before shippment, the samples price is a higher than mass order. When the mass order placed, we can return you the samples cost, or send you more piece products with the shippments.

You can buy the samples from us directly using t/t, western uion, or paypal. And you can also buy it on our online store.

3. Warranty
OCOM is dedicated to providing most cost-effective products and services with reliable quality that will meet customers'satisfication;

We was qualified by global fortune 500 company, and we have the top 1 level trade assurance which 100% protect your money and lead time.

Our warranty of the products is about 12+1 months from the shipment normally, some designated models can have as long as 24 months warranty;

Any product within 30 days of delivery failure occurs shall be deemed invalid delivery (DOA). DOA products

will give priority to the replacement, and shipped by courier.

For mass order, we would like to supply some spare parts with shipment for local quickly repair. And after that, you can returned failure parts for rework and analysis.

4. Payment Terms
For mass order, you can pay us by using T/T, LC, Western Union, Escrow or others. About samples order, T/T, Western Union, Escrow,Paypal are acceptable.Currently,you can pay using Moneybookers, Visa, MasterCard and bank transfer. You can also pay with select debit cards including Maestro, Solo, Carte Bleue, PostePay, CartaSi, 4B and Euro6000.

5. Shipment
We accept all kinds of shipping ways including: express, air, sea, truck, or pick up by customers personally.

6. Customer

Our main customers from Eruopean, Australia, and the fast growing South America, Africa, Russia...,

We have servered more than 2200 customers from 159 countries, including the global fortune 500 company like Unilever, O2.....50 of them are the biggest distributor in the local teritories.

Why You Choose OCOM?

·Leading One-Stop POS and Auto-ID Related Products Supplier Qualified by Global Fortune 500 Companies
·Tier 1 customers including Unilever, O2, Star...
·2200+ Customers Cover 159 Countries;
·9 Years OEM/ODM Experience.
·Top 1 Level Trade Assurance in POS industrial quarantee quality and shipment date
·Fast respondes and professional service
·ISO, FCC, CE , Soncap, POA, BIS, and other Certificates
·12+1 months wanrranty.
·Shortlisted in "China Best Employer Award"
·Belief: Integrity Based, Strive for Excellence, Win-win Cooperation

Company Information

OCOM Technologies Ltd. is the main supplier and manufacturer of POS and Auto-ID related products with TUV verified.

OCOM’s products portfolio covers Thermal Printer, Barcode Printer, Dot Matrix Printer, Barcode Scanner, POS Terminal, Magnetic Card Reader, Date terminal, and other POS Peripherals products(Cash Drawer,Customer Display,POS Monitor, POS keyboard,Money counter,Electronical Scale,Thermal Paper), which are widely used for retailing, restaurant, bank, lottery, transportation, logistic, and other applications. We have CE, FCC and other required certifications.

OCOM's mission is to be the compelling choice for our partners, and our three basic belief are "Integrity based, Strive for excellence, Win-win cooperation". We would like establish stable and reliable partnerships with customers all over the world. OEM/ODM is welcome.

Together we quest for the best.

OCOM Technologies Limited.

Address: 4/F, Block 10, Zhongxing Industrial Park, Chuangye Road, Nanshan Shenzhen 518054, China;
Website: www.ocominc.com, www.possolution.com.cn;
E-mail: richard@ocominc.com, richard@ocomtech.com.cn;
Trade Manager: szocominc;
Skype: ocominc2000;
MSN: ocomtech@hotmail.com ;
QQ: 2485890637;
Wechat: hj34924238;
Whatsapp: 0086.133.52932860;
Mobile: 0086.133.52932860;
Tel: 0086.755.86053207 ext 808;
Fax: 0086.755.86053207 ext 868;

*Reliable One-Stop POS Related Products Supplier Who Serving Global Fortune 500 Clients *